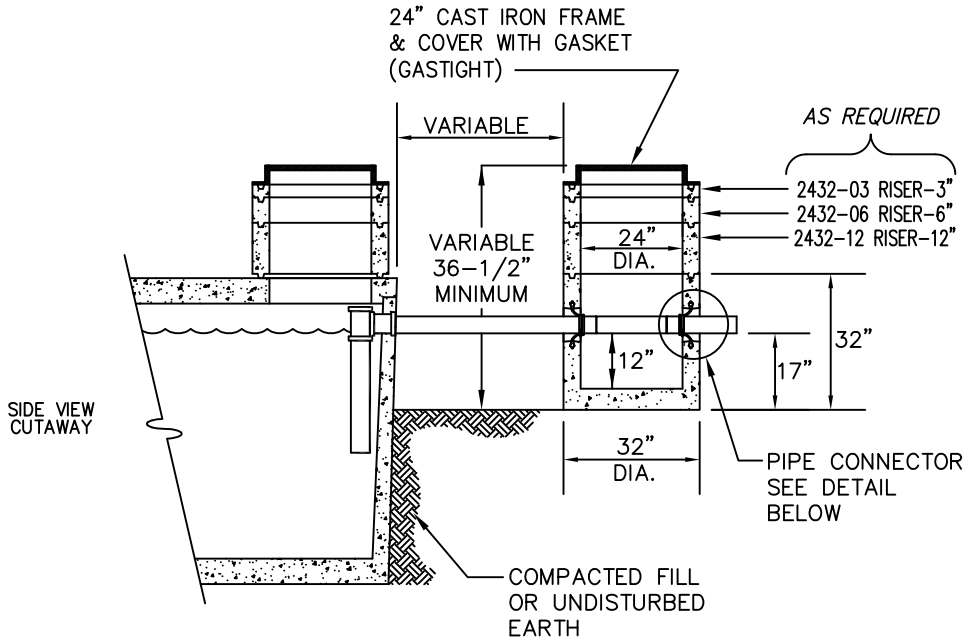

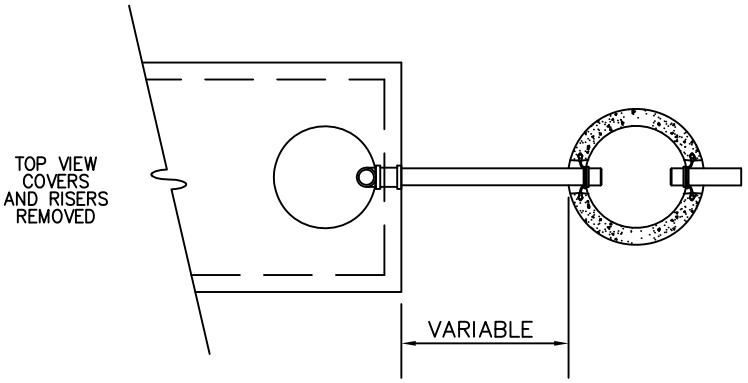

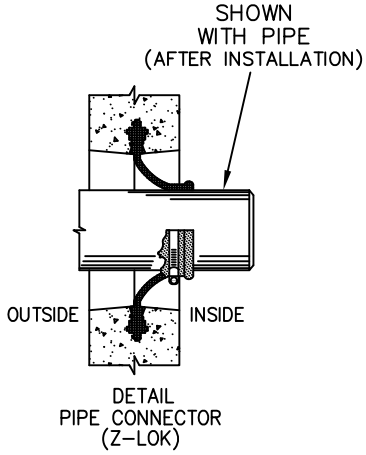

NOTES:

1. SAMPLE BOX SHALL BE JENSEN PRECAST MODEL 2432-Z OR APPROVED EQUAL.
2. THIS SAMPLE BOX IS NOT INTENDED FOR THE INTRODUCTION OF DOMESTIC SEWAGE. LOCATION AND TRIBUTARY DISCHARGE SOURCES SHALL BE APPROVED BY THE DSRSD INSPECTOR.

Dublin San Ramon Services District	REVISION DATE MAR 2012
SAMPLING BOX	REVISED BY BCD
SIGNED COPY ON FILE AT DISTRICT OFFICE	DRAWING S-15